2-Speed Gear Set / Brake System Exploded View

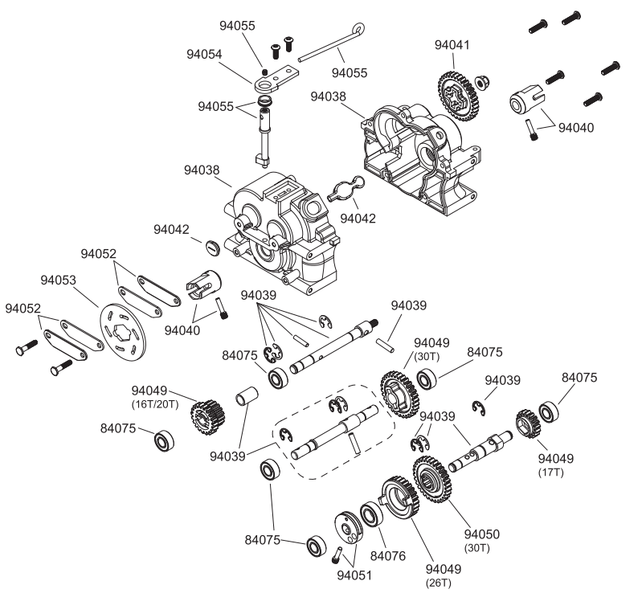

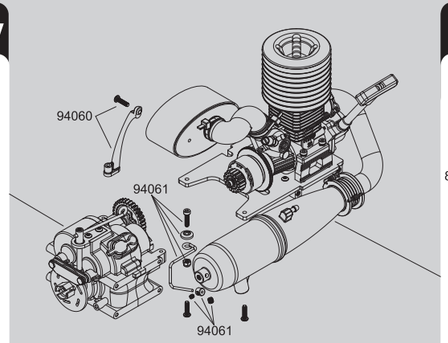

Wheelie Wheel Exploded View

OPTIONAL PARTS

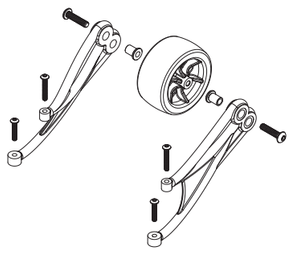

Engine / Exhaust System Exploded View

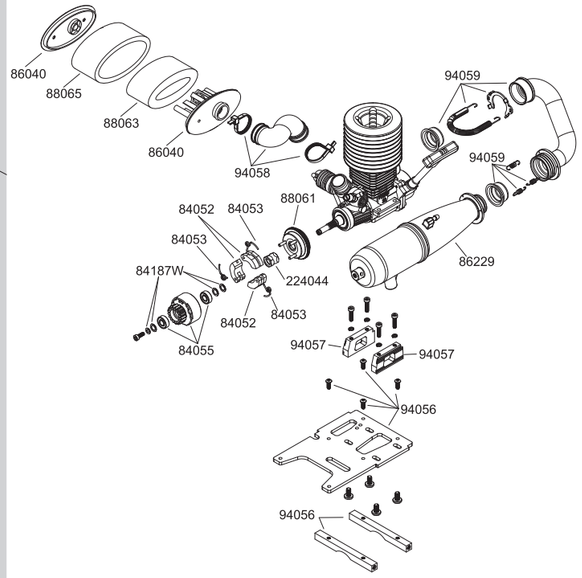

Fuel Tank/Fuel Tube Exploded View

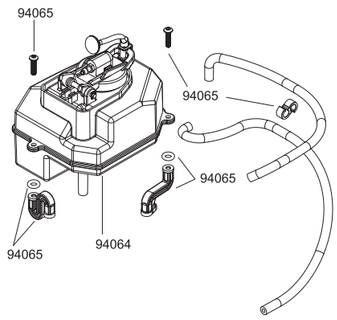

Servo / Radio Box Exploded View

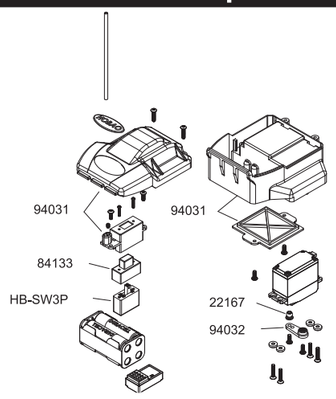

Throttle / Brake Linkage Exploded View

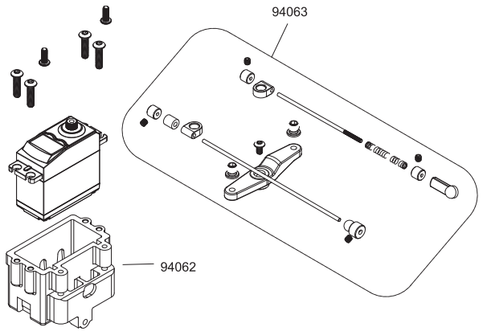

Upper Roll Brace Exploded View

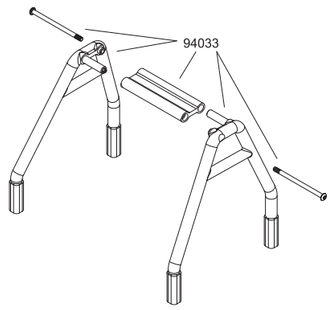
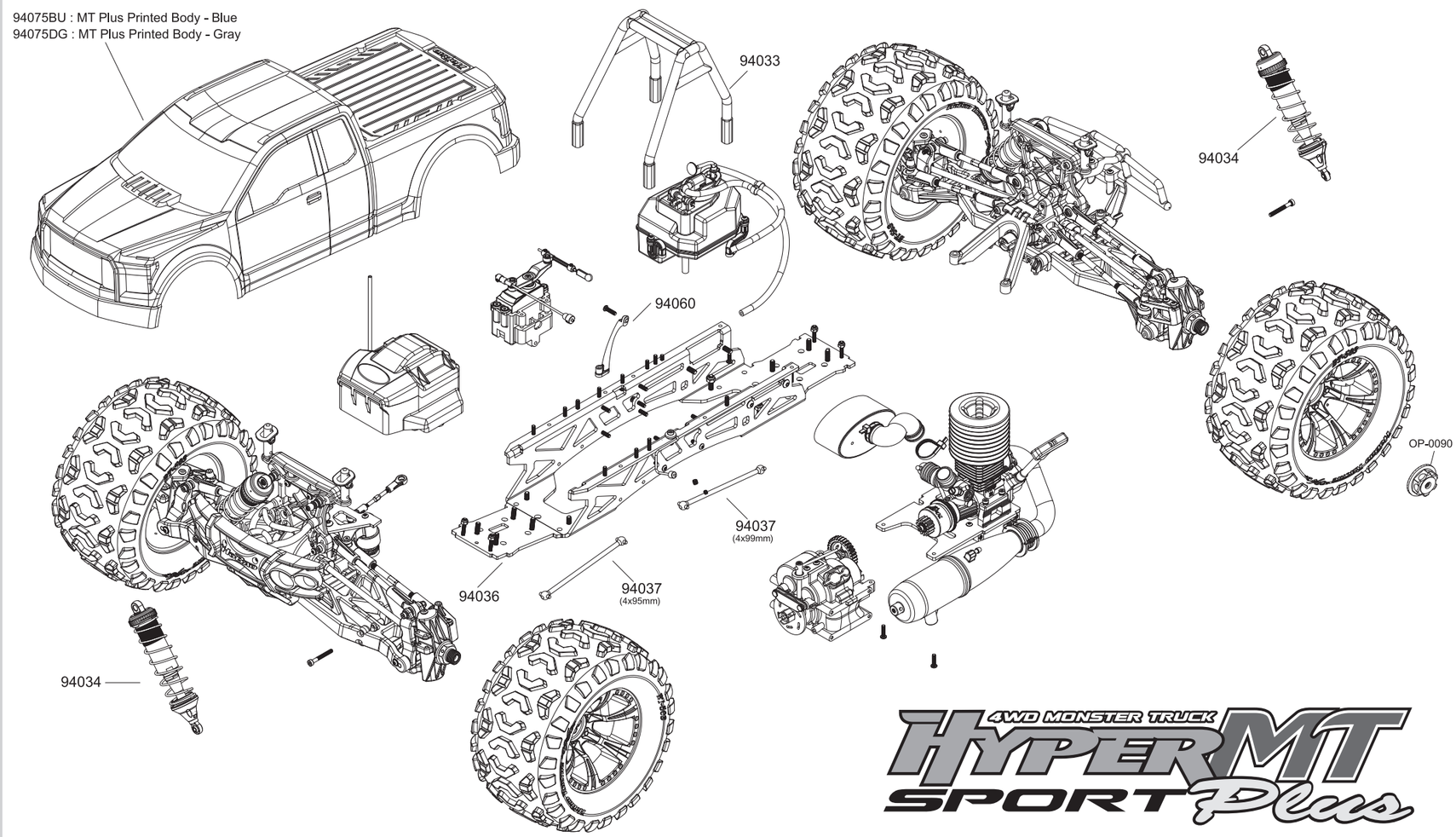
Nitro Full Exploded View